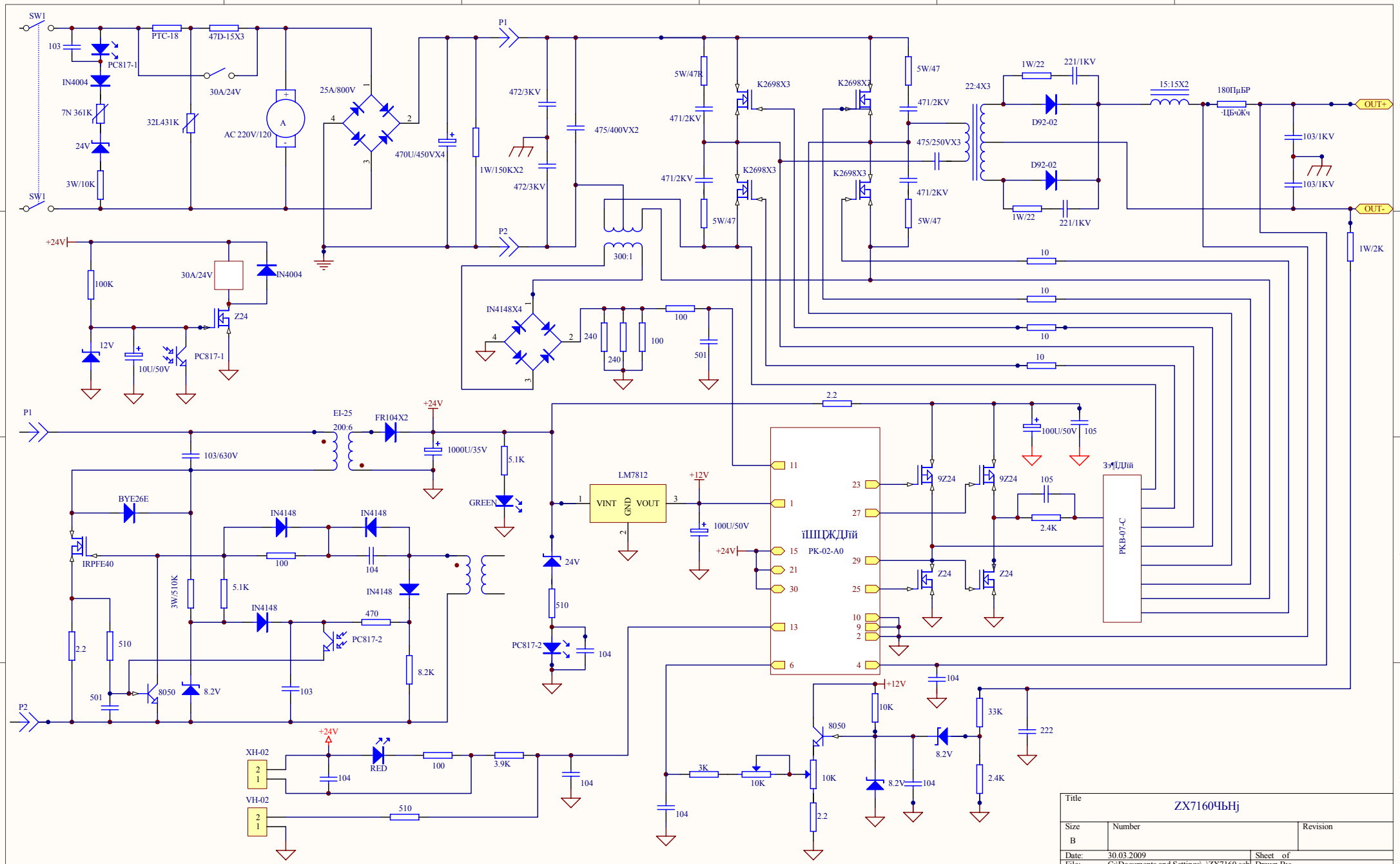

Title	ZX7160ЧЬНj	
Size B	Number	Revision
Date: 30.03.2009		Sheet of
File: C:\Documents and Settings\..\ZX7160.sch		Drawn By: